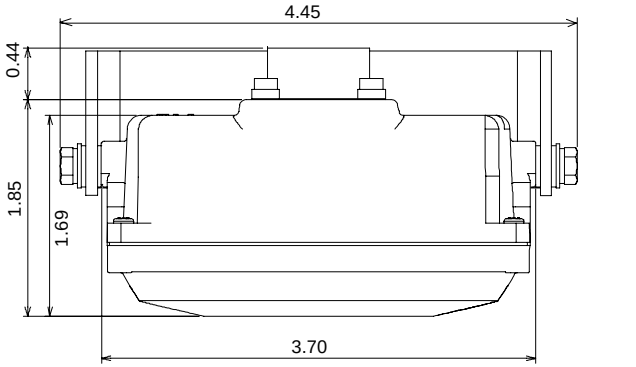

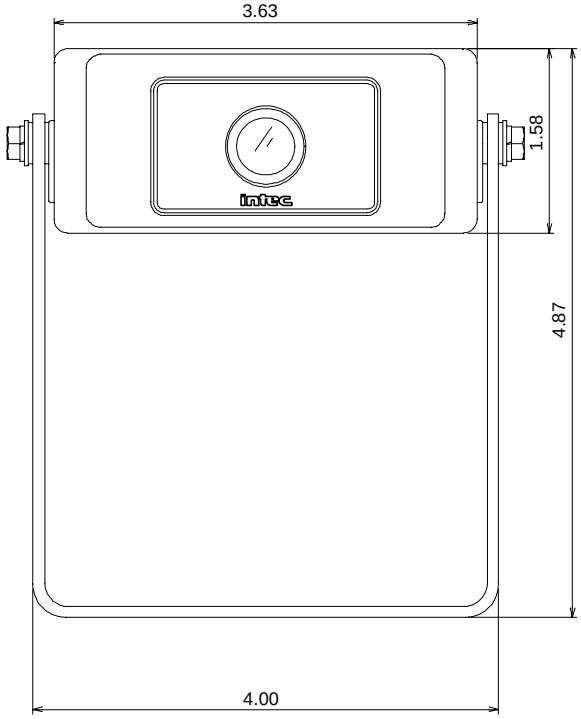

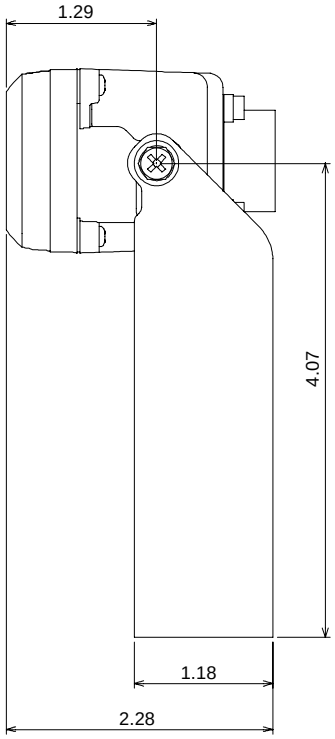

Installation Hole Dimensions

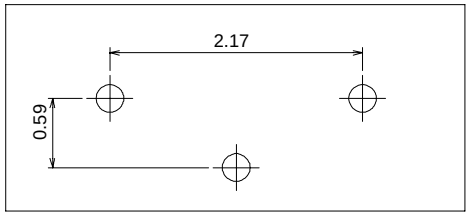

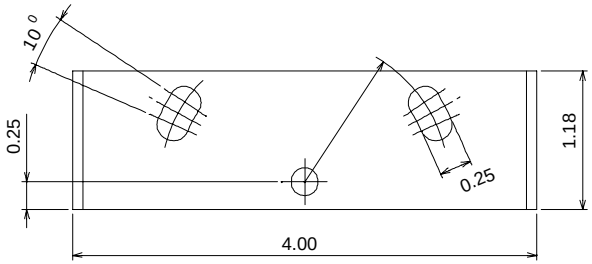

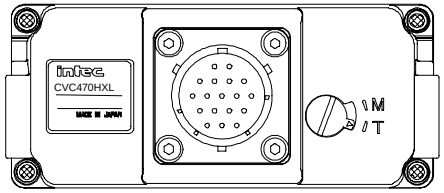

Revisions					Dimensions shown are in inches		Title: CVC470XL Series Dimensional
Rev	Description	Date	intec video systems, inc.	23301 Vista Grande Laguna Hills, CA 92653 949-859-3800 / 4256 State Route 51 North Belle Vernon, PA 15012 724-929-5500	0 ~ 0.50	± 0.02	THIS DOCUMENT CONTAINS CONFIDENTIAL PROPRIETARY INFORMATION. IT SHALL NOT BE USED, DISCLOSED, OR REPRODUCED IN WHOLE OR IN PART WITHOUT WRITTEN PERMISSION FROM INTEC VIDEO SYSTEMS, INC.
					0.50 ~ 2.00	± 0.04	
					2.00 ~ 4.00	± 0.08	
			Prepared By KEB	Date 05/24/07	4.00 ~ 20.00	± 0.12	PRINTED COPIES ARE UNCONTROLLED
			Approved By DN II	Date 06/28/07	20.00 ~ 40.00	± 0.16	ALWAYS USE WORK INSTRUCTIONS OF SAME REVISION LEVEL
					40.00 ~	± 0.25	
							Model: CVC470XL Series — REV A
Customer:			Form Number: Intec 001	Date: 06/11/07			