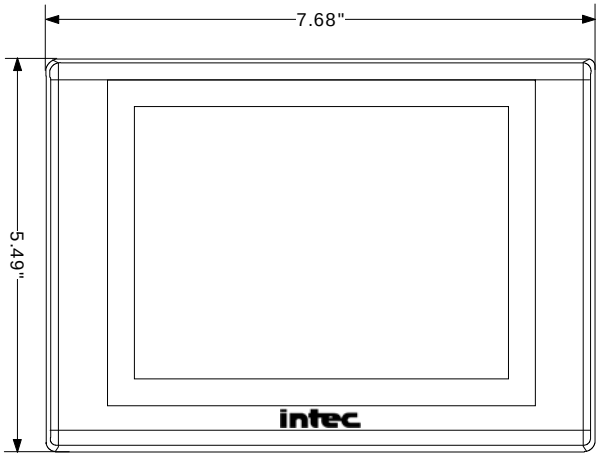


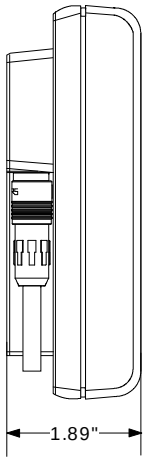


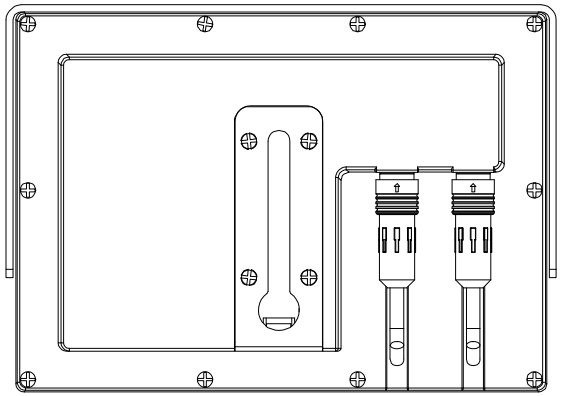

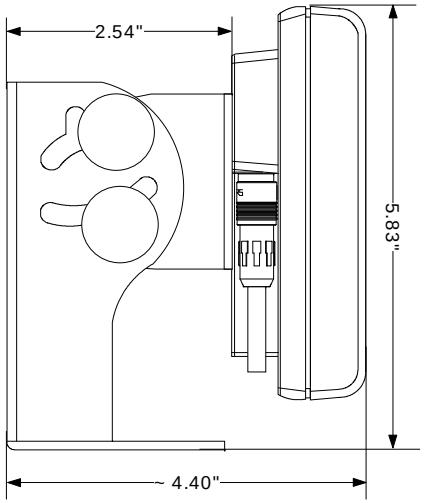


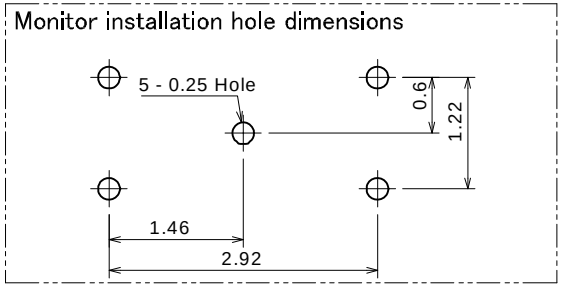


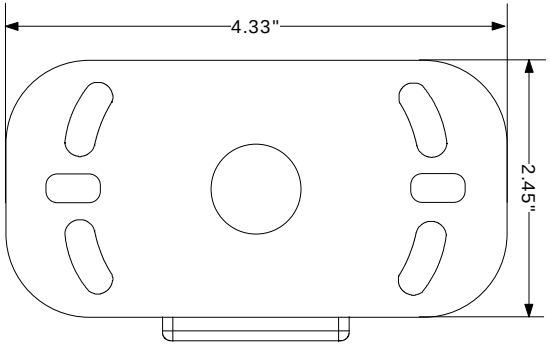


| Revisions | | | | | | | |
|---|---|---|---|---|---|---|---|
| Rev | Description | Date | intec video systems, inc. | 23301 Vista Grande Laguna Hills, CA 92653 949-859-3800 | 4256 State Route 51 North Belle Vernon, PA 15012 724-929-5500 | Dimensions shown are in inches | Title: CVD640LCD Dimensional Drawing |
| | | | | | | 0 ~ 0.50 ± 0.02 | THIS DOCUMENT CONTAINS CONFIDENTIAL PROPRIETARY INFORMATION. IT SHALL NOT BE USED, DISCLOSED, OR REPRODUCED IN WHOLE OR IN PART WITHOUT WRITTEN PERMISSION FROM INTEC VIDEO SYSTEMS, INC. |
| | | | | | | 0.50 ~ 2.00 ± 0.04 | |
| | | | | | | 2.00 ~ 4.00 ± 0.08 | |
| | | | Prepared By KEB | Date 03/25/08 | | 4.00 ~ 20.00 ± 0.12 | PRINTED COPIES ARE UNCONTROLLED |
| | | | Approved By DN2 | Date 03/26/08 | | 20.00 ~ 40.00 ± 0.16 | ALWAYS USE WORK INSTRUCTIONS OF SAME REVISION LEVEL |
| | | | | | | 40.00 ~ ± 0.25 | |
| | | | | | | | Model: REV A |
| Customer: | | | Form No.: INTEC 01-004 Rev.A | Date: 08/07/07 | | | |