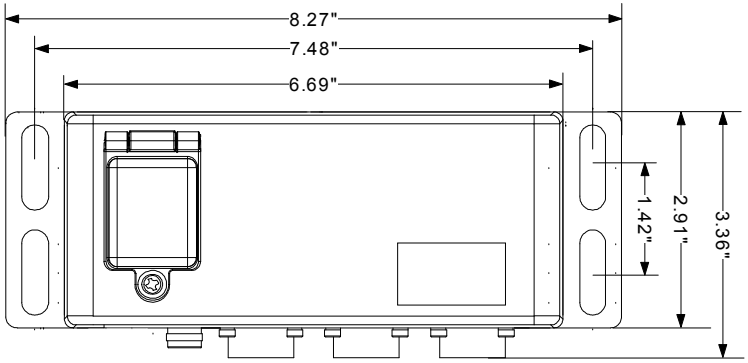

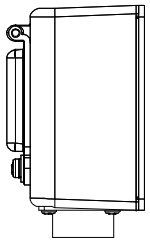

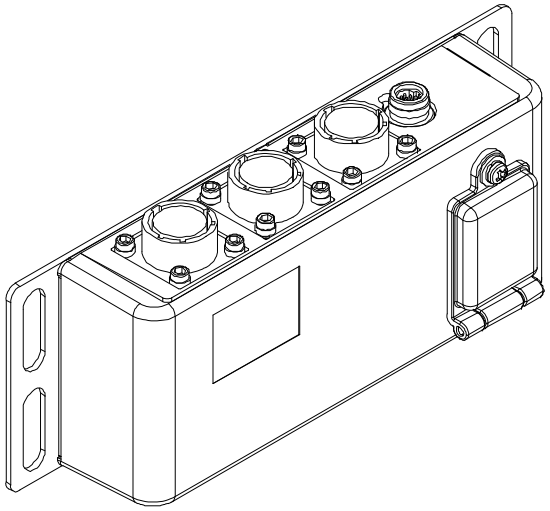

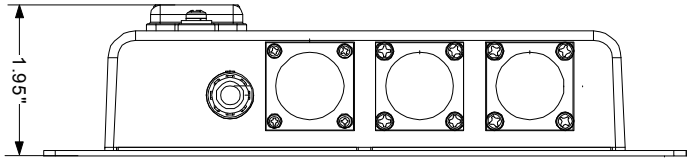

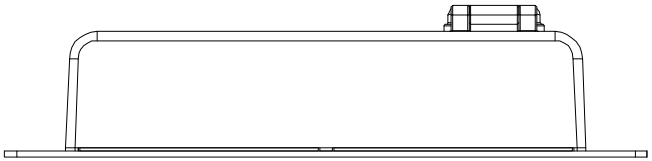

Revisions		
Rev	Description	Date

intec video systems, inc.

23301 Vista Grande
Laguna Hills, CA 92653
949-859-3800

4256 State Route 51 North
Belle Vernon, PA 15012
724-929-5500

Prepared By KEB	Date 09/16/11
Approved By	Date
Customer:	Form No.: INTEC 01-004 Rev.A

Dimensions shown are in inches	
0 ~ 0.50	± 0.02
0.50 ~ 2.00	± 0.04
2.00 ~ 4.00	± 0.08
4.00 ~ 20.00	± 0.12
20.00 ~ 40.00	± 0.16
40.00 ~	± 0.25

Title: CVS102XL Dimensional Drawings

THIS DOCUMENT CONTAINS CONFIDENTIAL PROPRIETARY INFORMATION. IT SHALL NOT BE USED, DISCLOSED, OR REPRODUCED IN WHOLE OR IN PART WITHOUT WRITTEN PERMISSION FROM INTEC VIDEO SYSTEMS, INC.

PRINTED COPIES ARE UNCONTROLLED

ALWAYS USE WORK INSTRUCTIONS OF SAME REVISION LEVEL

Model: CVS102XL

REV A

Date: 08/07/07